BLE-K3 Bluetooth Serial Port Transparent Transmission Module

Datasheet

Version: V1A

https://wch-ic.com

1. Overview

BLE-K3 Bluetooth serial port transparent transmission module is developed based on CH592F Bluetooth serial port transparent transmission chip. It supports BLE5.3, and the module supports slave mode. Supporting serial port AT configuration and Bluetooth communication configuration in slave mode. The maximum baud rate of the serial port is 1Mbps. In Bluetooth slave mode, parameters such as Bluetooth name and manufacturer information can be set, or configured through APP or serial port commands, which is convenient and fast.

Providing PC virtual serial port driver allows the Bluetooth interface to directly use serial port debugging tools and is compatible with serial port applications. It can communicate with the serial port interface without secondary development, making it easy for the serial port to be plug-free and not limited by cable distance.

BLE-K3 module selection table:

Model	Module (Physical picture)	Features
BLE-B-K3-ANT	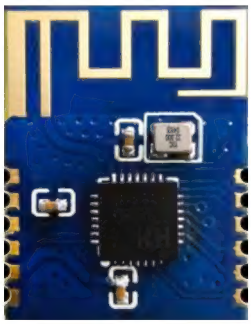	Onboard PCB antenna; Built-in 32M crystal.

2. Feature

- Support slave mode
- Support serial port AT configuration and Bluetooth transmission configuration
- PC Bluetooth virtual serial port driver
- Compatible with existing serial port software and tools, no need for secondary development
- Support Windows/Linux/Android/iOS system Bluetooth host connection
- GPIO and synchronous GPIO functions, and support Bluetooth control
- Transmission distance 100 meters
- Transmission power adjustable in 8 levels
- Support 3.3V and 2.5V operating voltage
- Asynchronous serial port default baud rate 38400bps
- Serial port supports 5, 6, 7 or 8 data bits and 1 or 2 stop bits
- The serial port supports odd, even, no check, blank 0, flag 1 and other check modes.
- Support getting chip supply voltage parameters

3. BLE-B-K3-ANT Module Size and Pins

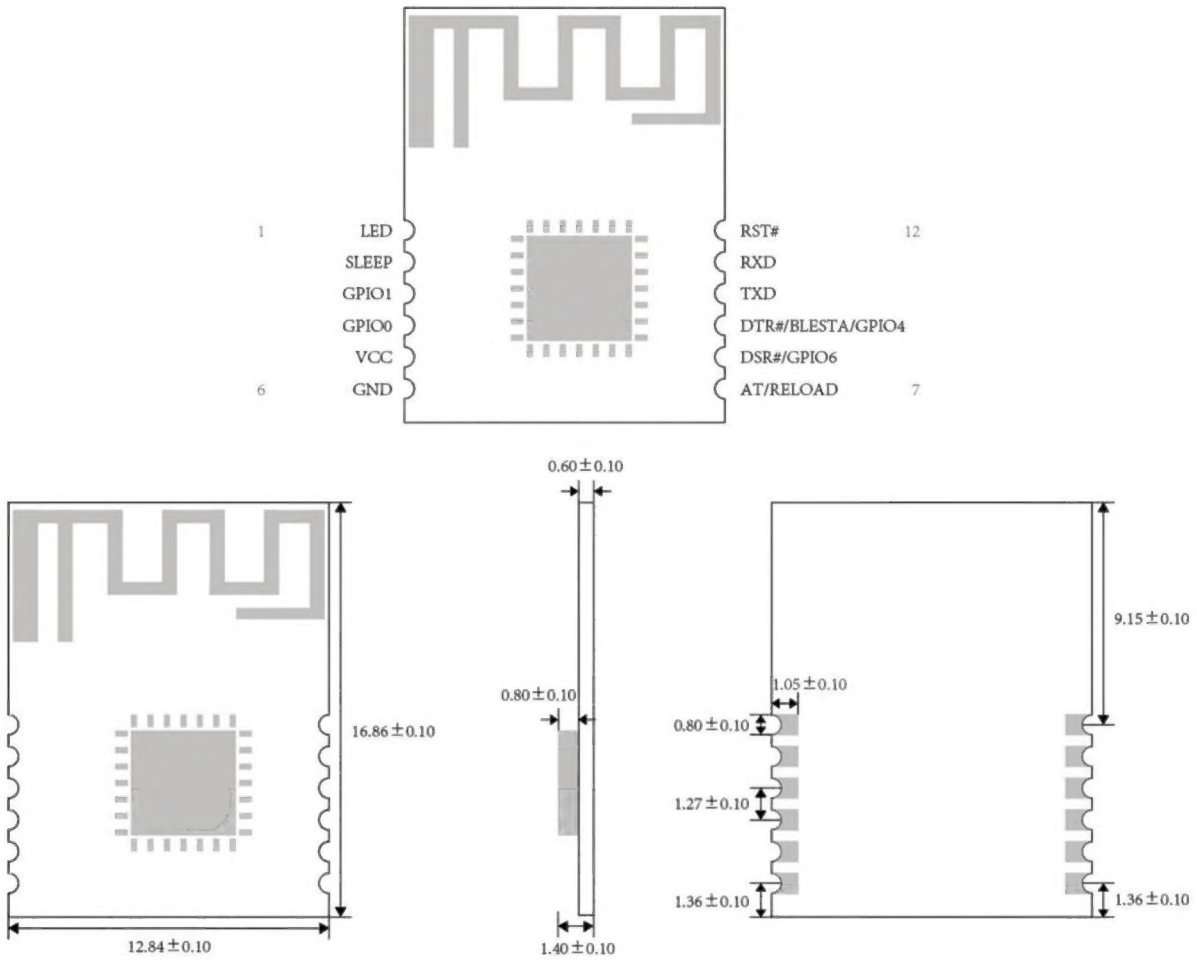

Pin No.	Pin name	Type	Pin description
1	RELOAD /LED	I/O	When the chip is powered on, it is the input pin for RELOAD to restore factory settings, and the factory settings will be restored after detecting a continuous low level for 2 seconds; After the chip is powered on, it is the output pin for the LED chip status indication signal, active low level;
2	SLEEP	I	Low-power consumption control pin, active low level, built-in pull-up resistor
3	GPIO1	I	Synchronous input IO
4	GPIO0	O	Synchronous output IO
5	VCC	P	Module power input
6	GND	P	Power ground
7	AT	I	AT transparent transmission function switching pin 0: AT mode 1: Transparent transmission mode
8	DSR# /GPIO6	I/O	DSR#: MODEM input signal for UART, data device ready GPIO6: General-purpose Input/Output (Note 2)
9	DTR#	I/O	DTR#: MODEM output signal of UART, data terminal ready

	/BLESTA /GPIO4		BLESTA: Bluetooth connection status output (Note 3) GPIO4: General-purpose input and output IOs
10	TXD	O	Serial port transmitting pin
11	RXD	I	Serial port receiving pin
12	RST#	I	Module reset pin, active low level

Note (1): P: Power pin, I: Input pin, O: Output pin

Note (2): DSR#/GPIO6 pin functions are multiplexed. The default DSR# pin function can be set using AT or APP to enable the GPIO function. After enabling, the DSR# function of this pin will be invalid.

Note (3): DTR#/BESTA/GPIO4 pin functions are multiplexed. The default DTR# pin function is that DTR#/BLESTA/GPIO4 is set to pull-up input mode after the chip is powered on. The default is high level and can be connected externally. A 4.7K pull-down resistor is set to a low level. After the chip is powered on, the DTR# and BLESTA pin functions will be selected respectively according to the input level. By default, the BLESTA pin outputs low level when Bluetooth is not connected, and outputs high level after Bluetooth is connected. GPIO can be set and enabled using AT or APP. After setting the GPIO function, the DTR#/BLESTA function of this pin becomes invalid.

4. Function Description

4.1 Slave Mode

In slave mode, the chip will send fixed broadcast data. It supports modifying the chip name in the scan response data, which is the chip name described below in the document. The default broadcast interval is 100mS. The slave machine supports four basic Bluetooth services, among which the transparent transmission service UUID is 0xFFF0. The UUID of the communication is 0xFFF1, 0xFFF2, 0xFFF3. Refer to the table below for description.

UUID	Attributes	Description
0xFFF1	Notify	The data received by the serial port will be sent to the host through this channel. The host needs to turn on the notification. The data will be packetized according to the MTU size. If the data exceeds the MTU size, it will be subpackaged and sent by the chip.
0xFFF2	Write only	The host sends data channel, and the sent data will be sent out through the serial port.
0xFFF3	Read, write	Configure channels, IO synchronization and other functions.

4.2 Serial Port Transparent Transmission Function

Serial port transparent transmission uses an asynchronous serial port, and the default factory baud rate is 38400bit/s. The serial port receiving buffer of the chip is 512 bytes. When the serial port receives data, it will perform Bluetooth transmission in real time. It is recommended to ensure that the data transmission is completed when performing AT configuration. When entering AT configuration, the currently received transparent transmission data will be lost if it is not saved. The data that has been saved in the receiving buffer will continue to be sent when exiting AT mode. When Bluetooth receives data, it will be transmitted directly to the serial port. The data will not be temporarily stored. When there is a lot of Bluetooth data, it will wait to be sent. If the AT mode is currently entered, the data received by Bluetooth will be discarded directly. It is recommended that the host impose some speed restrictions when sending to reduce packet loss and buffer overflow.

Since the Bluetooth communication rate is related to its environment, when the serial port baud rate exceeds 9600bit/s and the average Bluetooth RSSI is less than 70dBm.

4.3 Parameter Configuration

There are two configuration methods: One is to configure and control through Bluetooth in device mode, and the other is to enter AT configuration mode through the serial port for configuration.

Bluetooth configuration is only used in slave mode, the configuration commands can be operated using the interfaces in the routine, after configuration the chip will automatically save the parameters and take effect on the next boot.

Serial port configuration is configured when the serial port enters AT mode, AT pin. When performing AT operation on the serial port, you must wait until the chip responds before transmitting the next packet of data, and cannot send continuously. Data is uniformly transmitted using ASCII characters, and parameters in HEX format are also converted into ASCII format.

When modifying configuration parameters, some do not take effect immediately and need to be restarted to take effect. It is recommended to restart the chip after modifying all parameters.

4.4 Device Information

Device information attributes supported by slave mode include: System ID, Model Number String, Serial Number String, Firmware Revision String, Hardware Revision String, Software Revision String, Manufacturer Name String,

PnP ID.These parameters support user modification. Enter a string in String format, with a size not exceeding 18 characters. In addition, the two parameters SystemID and PnPID need to comply with the Bluetooth protocol. If the SystemID parameter is not configured by the user, the chip will automatically generate one. PnPID is not configured. It will be displayed as all 0s, please refer to the table below.

UUID	Name	Description
0x2A23	System ID	System ID, 8 bytes
0x2A24	Model Number String	Chip name string
0x2A25	Serial Number String	Serial number string
0x2A26	Firmware Revision String	Firmware version information
0x2A27	Hardware Revision String	Hardware version information
0x2A28	Software Revision String	Software version information
0x2A29	Manufacturer Name String	Manufacturer name information
0x2A50	PnP ID	PnP ID, 7 bytes

4.5 Low-power Consumption Functions

The low-power mode is divided into two sleep modes. One is sleep mode, Bluetooth will continue to work and other irrelevant peripherals will be turned off. The other is the chip enters the power-down mode, and the chip is directly reset and re-run when it wakes up. The sleep mode can be set through AT commands. It is recommended to choose the corresponding sleep mode according to your own needs and do not change the sleep mode frequently.

The main control cannot transmit serial port data during sleep mode. The low-power sleep control pin (SLEEP pin) can be pulled low to control the chip to enter low-power mode. This mode is not a true sleep but is based on Bluetooth communication requirements. It will automatically wake up and process Bluetooth. Data received on Bluetooth will still be transmitted to the main control through the serial port. If Bluetooth has no transaction processing, it will automatically sleep. However, if the main control wants to send data, it must pull the sleep pin high and wait for more than 20mS. Send data, otherwise data errors will occur. After pulling high, the chip will exit low-power mode.

In power-down mode, the chip will power off all irrelevant peripherals, Bluetooth will no longer run, and the control sleep pin (SLEEP pin) will be pulled low to enter power-down mode. The chip will be reset when it is pulled high to wake up.

4.6 Restore Factory Settings

The chip provides a restore to factory settings pin (RELOAD/LED). After the chip is powered on, it will detect the restore to factory settings pin. If it detects that the pin is pulled low for 2 seconds, the chip will restore to factory settings. After that, the chip will be restored to factory settings. parameters run. After RELOAD detection processing, this pin will be reused as an LED output pin.

4.7 LED Pin Functions

The LED pin of the chip displays the current operating status of the module. It is active at low level and high level by default. You can also connect an LED light to visually observe the working status of the module.

In slave mode, the module will enter the broadcast state after initial success. At this time, the LED will continuously flash at a time of 500mS low and 500mS high; when a host is connected, the LED pin will be pulled low to keep the external LED in a constant light state; At this time when there is data sent and received the LED will blink once in 50mS high 50mS low time, and finally keep the low-level state, after disconnecting it will re-enter the broadcast state.

When the low-power consumption mode is turned on, the LED pin will output constant high and the LED status

will not be updated.

4.8 External Crystal Oscillator

The chip requires an external 32M crystal oscillator to work. The chip pins have built-in load capacitors, so there is no need for external load capacitors. If there are strict requirements for frequency offset, it is recommended to reserve the position of the external load capacitor to facilitate testing and adjusting the frequency offset on the overall system.

4.9 Internal LSI and RF Calibration

The chip provides two methods, timing and temperature difference, to calibrate the internal LSI clock and RF. It is recommended that in applications where the temperature difference is relatively large or the ambient temperature changes rapidly, the timing or temperature difference method should be appropriately set to calibrate the chip.
Timing mode: Perform internal LSI clock calibration and RF calibration regularly according to the set time parameters.
In the temperature difference mode, the temperature difference is sampled regularly according to the set time parameters. When the temperature difference reaches the set threshold, internal LSI clock calibration and RF calibration are performed.

5. AT Instruction Set

5.1 AT Basic Format

In AT mode, the chip acts as a serial port slave device, and the main control (host) connected to the chip is the serial port master device. AT commands are sent by the host and the chip responds.

The host transmits the basic format:

<AT><+><command code><operator><parameter><{CR}{LF}>

Note: The basic format is most command codes, some commands are different, see the command set below for details. Among them, {CR}{LF} corresponds to "\r" and "\n" defined in the character format. The hexadecimal value is: 0x0D. 0x0A is the carriage return and line feed character in ASCII. {CR} {LF} is used as a separator and terminator.

The chip returns the basic format:

Return parameter format: <parameter><{CR}{LF}><OK><{CR}{LF}>

Correct status returned: <OK><{CR}{LF}>

Error status returned: <{CR}{LF}><ERR:>< error code><{CR}{LF}>

Note: The error code is a HEX form composed of two ASCII characters. If the error code is the character "01", it means 0x01 in hexadecimal. The current error codes and their meanings are shown in the figure below:

Error code	Meaning
01	Cache error: The current chip does not have cache to respond. You can try again later.
02	Parameter error: Some parameters of the AT command sent do not meet the specifications. Note that the chip will not judge all parameters and requires external guarantee of basic correctness.
03	Command not supported: The command is not supported in the current mode
04	The command cannot be executed: The command cannot be executed temporarily. You can try again later. Generally, there is not enough cache to process the command and the chip is busy.

5.2 Serial Port Configuration Instruction Set

No.	Instruction	Description
1	AT...	Enter AT configuration
2	AT+RESET	Reset chip
3	AT+VER	Get chip version
4	AT+HELLO	Query/Set startup language
5	AT+RELOAD	Reset all parameters
6	AT+SHOW	Display chip information
7	AT+EXIT	Exit AT configuration
8	AT+GPIO	Query/Set GPIOs and synchronous GPIOs
9	AT+INITIO	GPIO output initial value set
10	AT+UART	Query/Set serial port parameter
11	AT+MAC	Query local MAC address
12	AT+TPL	Query/Set transmit power
13	AT+BLESTA	Query Bluetooth status
14	AT+DISCONN	Disconnect current connection
15	AT+BLEMODE	Query/Set Bluetooth mode
16	AT+CCADD	Query the current connection MAC address

17	AT+NAME	Query/Set chip name
18	AT+PNAME	Query/Set device name
19	AT+SYSID	Query/Set the system ID of device information
20	AT+MODNAME	Query/Set the chip name of device information
21	AT+SERINUM	Query/Set the serial number of device information
22	AT+FIRMREV	Query/Set firmware version of device information
23	AT+HARDREV	Query/Set hardware version of device information
24	AT+SOFTREV	Query/Set software version of device information
25	AT+MANUNAME	Query/Set manufacturer name of device information
26	AT+PNPID	Query/Set PNP ID of device information
27	AT+RSSI	Set read RSSI
28	AT+ADC	Read ADC value
29	AT+SLEEP	Set chip sleep mode
30	AT+BAT	Read power supply voltage of the chip
31	AT+BDSP	Host scan shows slave voltage
32	AT+BLECFGEN	Bluetooth configuration interface switch
33	AT+BCCH	Broadcast channel settings
34	AT+ADVINTER	Broadcast interval setting
35	AT+CONNINTER	Connection interval setting
36	AT+LSICALI	Internal 32K clock calibration settings
37	AT+RFCALI	Bluetooth RF calibration settings
38	AT+TNOW	TNOW pin function setting
39	AT+BSTA	Bluetooth status pin settings
40	AT+AFEC	Flow control and output pin settings
41	AT+IOEN	Set GPIO function enable

1. Enter AT configuration

   Instruction: AT…{CR}{LF}

   Description: This command is used when entering AT configuration without using pins. It is sent after the serial port is idle for 500mS. The chip will enter AT mode and return to the status. Sending this command after entering AT mode will also give a response.

   Return: OK{CR}{LF}

   Example: Host transmit: AT...{CR}{LF} Chip response: OK{CR}{LF}

2. Reset chip

   Instruction: AT+RESET{CR}{LF}

   Description: This command will reset the chip after 20mS.

   Return: OK{CR}{LF}

3. Get chip version

   Command: AT+VER{CR}{LF}

   Description: Get the chip version, return the version number and status

   Return: VER: <Version number>{CR}{LF}OK{CR}{LF}

   Example: Host transmit: AT+VER{CR}{LF} Chip response: VER:V1.00{CR}{LF}OK{CR}{LF}

4. Startup message

   Get instruction: AT+HELLO?{CR}{LF}

Description: Get the current startup language, which can be used as a sign that the chip initialization is completed.

Return: <Startup language string>{CR}{LF}OK{CR}{LF}

Example: Host transmit: AT+HELLO?{CR}{LF} Chip response: Welcome{CR}{LF}OK{CR}{LF}

Set instruction: AT+HELLO=<Startup language string>{CR}{LF}

Description: Set the current startup language. When the startup language is not used, the startup language string can be empty and the number of characters must be less than 30.

Return: Set the status. If it is correct, the setting is successful. If it is wrong, the error code will be queried.

Example: Host transmit: AT+HELLO=WCH MODULE{CR}{LF} Chip response: OK{CR}{LF}

Example: Host transmit: AT+HELLO={CR}{LF} Chip response: OK{CR}{LF}, do not enable this function

5. Reset all parameters

Instruction: AT+RELOAD{CR}{LF}

Description: This command will reset all parameters of the chip, that is, restore the factory settings and keep them.

Return: Status

Example: Host transmit: AT+RELOAD{CR}{LF} Chip response: OK{CR}{LF}

6. Display information

Instruction: AT+SHOW{CR}{LF}

Description: Display some information about the chip.

Returns: Information parameters and status.

Example: Host transmit: AT+SHOW{CR}{LF} Chip response: <chip info>OK{CR}{LF}

7. Exit AT configuration

Instruction: AT+EXIT{CR}{LF}

Description: Exit the current AT configuration mode. Use it together with the enter configuration command. Use the AT pin to enter the AT configuration mode. This command cannot be used.

Return: OK{CR}{LF}

Example: Host transmit: AT+EXIT{CR}{LF} Chip response: OK{CR}{LF}

8. GPIO configuration

Get instruction: AT+GPIO<x>?{CR}{LF}

Description: x is 4-7 in ASC format. Get the pin level status of x. Obtaining here will cause changes in the GPIO settings. When the current x pin is set to input mode, it will directly return the read IO level status; When the current x pin is set to output mode, using this command will reconfigure the pin to input mode, save the parameters, and return to the read IO level status. It is recommended that IO be fixed in one mode and its input and output configuration should not be modified midway.

Return: <level value: 0, 1>{CR}{LF}OK{CR}{LF}

Example: Host transmit: AT+GPIO4?{CR}{LF} Chip response: 1{CR}{LF}OK{CR}{LF}

Set instruction: AT+GPIO<x>=<level value: 0, 1>{CR}{LF}

Description: Same as getting, if the mode is wrong, the settings will be set and saved. It is recommended not to modify the input and output configuration midway.

Return: OK{CR}{LF}

Example: Host transmit: AT+GPIO4=0{CR}{LF} Chip response: OK{CR}{LF}

9. GPIO output initial value setting

Get instruction: AT+INITIO?{CR}{LF}

Description: The command obtains the default value of the GPIO output in the configuration. This value affects the value of the IO output after the power-on initialization is completed. The IO corresponding to the input state is

not concerned. What is obtained is a HEX converted ASCII, such as: 0xcc, indicating binary 11001100, bit7-bit0 correspond to GPIO7-GPIO0 respectively, which output low level for 0 and high level for 1.

Return: Execution status.

Example: Host transmit: AT+INITIO?{CR}{LF} Chip response: CC{CR}{LF}OK{CR}{LF}

Set instruction: AT+INITIO=<8 IO level value >{CR}{LF}

Description: The set parameter format is consistent with the obtained parameter format. Each bit represents the corresponding IO power-on output status. The host will save the parameters after the setting is completed.

Return: Execution status.

Example: Host transmit: AT+INITIO=00{CR}{LF} The IOs output at power-on are all low-level cores. Chip response: OK{CR}{LF}

10. Serial port setting

Get instruction: AT+UART?{CR}{LF}

Description: Returns the current serial port parameter configuration.

Return: <Baud rate>, <Data bit>, <Stop bit>, <Check bit>, <Timeout time>{CR}{LF}

Example: Host transmit: AT+UART?{CR}{LF} Chip response: 115200,8,1,1,50{CR}{LF}OK{CR}{LF}

Set instruction: AT+UART= <Baud rate>, <Data bit>, <Stop bit>, <Check bit>, <Timeout time>{CR}{LF}

Description: This command sets the serial port parameters, among which the baud rate supports parameters: 9600bit/s, 19200bit/s, 38400bit/s, 57600bit/s, 115200bit/s, 1000000bit/s; Parameters supported by data bit: 8, 9; Parameters supported by stop bit: 1, 2; Parameters supported by parity bit: 0 (no parity), 1 (odd parity), 2 (even parity); Timeout time is the timeout time of the data in the pass-through mode, and the unit is mS. After this command is sent, the chip will save the parameter of the setup and return the answer, and it will re-initialize the serial port according to the parameter of this configuration after 5mS.

Example: Host transmit: AT+UART=115200,8,1,0,50{CR}{LF} Chip response: OK{CR}{LF}

11. MAC address

Query instruction: AT+MAC?{CR}{LF}

Description: Read the Bluetooth MAC address of the chip, and the returned parameter format is xx:xx:xx:xx:xx:xx. The MAC is in little-endian format, that is, the low byte is first. Setting the MAC is not supported.

Return: Bluetooth MAC address

Example: Host transmit: AT+MAC?{CR}{LF} Chip response: 05:DF:39:4C:99:B4{CR}{LF}OK{CR}{LF}

Set instruction: AT+MAC=xx:xx:xx:xx:xx:xx{CR}{LF}, Parameters are filled in little endian format.

Description: It is not recommended to modify the MAC parameters. When modified, the chip will not verify the legality of the parameters. This parameter takes effect on the next power-on or reset.

Example: Host transmit: AT+MAC=05:DF:39:4C:99:B4{CR}{LF} Chip response: OK{CR}{LF}

12. Transmit power

Query instruction: AT+TPL?{CR}{LF}

Description: Query the current Bluetooth transmission power.

Returns: Power level.

Example: Host transmit: AT+TPL?{CR}{LF} Chip response: 0{CR}{LF}OK{CR}{LF}

Set instruction: AT+TPL=<x>{CR}{LF}

Description: Set the Bluetooth transmit power, x supported parameters: 0 (0DB), 1 (1DB), 2 (2DB), 3 (3DB), 4 (-3DB), 5 (-8DB), 6 (-15DB), 7 (-20DB), the other parameters are not supported, the setup parameter will be saved and will take effect at the next reboot.

Example: Host transmit: AT+TPL=1{CR}{LF} Chip response: OK{CR}{LF}

13. Query Bluetooth status

Instruction: AT+BLESTA?{CR}{LF}

Description: Query the current Bluetooth status. The status is composed of two ASCIIs, representing a HEX. Note that the modes are different. The following figure shows the status and meaning of each mode return.

Slave mode	
Status code	Meaning
00	Uninitialized
01	Device initialization completed
02	Broadcast
03	Prepare to broadcast status
04	Connection timed out
05	Connection succeeded
07	Mistake

Return: Status code in current mode.

Example: Host transmit: AT+BLESTA?{CR}{LF} Chip response: 02{CR}{LF}OK{CR}{LF}

14. Disconnect

Instruction: AT+DISCONN{CR}{LF}

Description: Disconnect the current connection. The status returned by this command is not that it has been disconnected but that the command has been accepted and can be executed. The result of the disconnection can be viewed using the query status.

Return: Status

Example: Host transmit: AT+DISCONN{CR}{LF} Chip response: OK{CR}{LF}

15. Bluetooth working mode

Query instruction: AT+BLEMODE?{CR}{LF}

Description: Returns the current Bluetooth working mode. The mode parameters are: 0 (Broadcast mode), 1 (Host mode), 2 (Device mode).

Return: Working mode.

Example: Host transmit: AT+BLEMODE?{CR}{LF} Chip response: 2{CR}{LF}OK{CR}{LF}

Set instruction: AT+BLEMODE=<x>{CR}{LF}

Description: The parameter x of the setting mode is: 0 (Broadcast mode), 1 (Host mode), 2 (Device mode). After the command is received, the configuration parameters are saved and will not be executed until the next restart.

Example: Host transmit: AT+BLEMODE=1{CR}{LF} Chip response: OK{CR}{LF}

16. Get the current connection MAC address

Instruction: AT+CCADD?{CR}{LF}

Description: Get the MAC address currently connected to the chip. The MAC is in little-endian format, that is, the low byte is first. If there is no connection, an empty MAC address will be returned.

Returns: The MAC address of the connection.

Example: Host transmit: AT+CCADD?{CR}{LF} Chip response: 05:DF:39:4C:99:B4{CR}{LF}OK{CR}{LF}

17. Chip name

Get instruction: AT+NAME?{CR}{LF}

Description: Get the chip name of the current device in string format.

Return: Current chip name.

Example: Host transmit: AT+NAME?{CR}{LF} Chip response: WCH MODULE{CR}{LF}OK{CR}{LF}

Set instruction: AT+NAME=<chip name string>{CR}{LF}

Description: The length of the chip name string is up to 18 characters, after the setup command is sent, the chip will keep this parameter and enable it after the next reboot, the chip name will be reflected in the broadcast packet

in the device mode, and the rename will be displayed when the host searches for it. This parameter is not used in other modes, but the chip name can be read with the command.

Return: Status

Example: Host transmit: AT+NAME=TEST NAME{CR}{LF} Chip response: OK{CR}{LF}

18. Device name

Get instruction: AT+PNAME?{CR}{LF}

Description: Get the device name of the device. This name is used in device mode and is used for attribute description. For details, please refer to the Bluetooth protocol.

Returns: Device name.

Example: Host transmit: AT+PNAME?{CR}{LF} Chip response: WCH PREI{CR}{LF}OK{CR}{LF}

Set instruction: AT+PNAME=< Device name string >{CR}{LF}

Description: Set the device name, save the parameters, and use it at the next startup. The name length should not exceed 18 characters.

Example: Host transmit: AT+PNAME=TEST PNAME{CR}{LF} Chip response: OK{CR}{LF}

19. System ID of device information

Get instruction: AT+SYSID?{CR}{LF}

Description: Obtain the system ID of device information. This system ID is used for information in device mode. For details, please refer to the Bluetooth protocol. If the user does not set this parameter, an ID will be generated according to the Bluetooth protocol after the chip initialization is completed, and it will be obtained during acquisition. After the user sets this parameter, a new one will not be generated after the chip initialization is completed, but the set parameters will be used.

Returns: Current system ID.

Example: Host transmit: AT+SYSID?{CR}{LF} Chip response: 05DF3900004C99B4{CR}{LF}OK{CR}{LF}

Set instruction: AT+SYSID=<System ID>{CR}{LF}

Description: The size of the system ID is 8 bytes, that is, 16 characters are sent for configuration. Every two characters form a byte. After configuration, it will be used at the next startup.

Return: Status

Example: Host transmit: AT+SYSID=0102030405060708{CR}{LF} Chip response: OK{CR}{LF}

20. Chip name of device information

Get instruction: AT+MODNAME?{CR}{LF}

Description: Get the chip name of device information, which uses the device information attribute parameter in device mode.

Returns: The chip name of the current device information.

Example: Host transmit: AT+MODNAME?{CR}{LF} Chip response: WCH BLE{CR}{LF}OK{CR}{LF}

Set instruction: AT+MODNAME=<Chip name>{CR}{LF}

Description: Set the chip name of the device information. The length should not exceed 18 characters.

Returns: Status.

Example: Host transmit: AT+MODNAME=TEST MODNAME{CR}{LF} Chip response: OK{CR}{LF}

21. Device information serial number

Get instruction: AT+SERINUM?{CR}{LF}

Description: Get the serial number of the current device information in string form.

Return: Serial number

Example: Host transmit: AT+SERINUM?{CR}{LF} Chip response: 170621000000{CR}{LF}OK{CR}{LF}

Set instruction: AT+SERINUM=< Serial number >{CR}{LF}

Description: The serial number is in the form of a string, and the character size does not exceed 18 characters. The settings are saved and the parameters will take effect at the next startup.

Returns: Status.

Example: Host transmit: AT+SERINUM=123456{CR}{LF} Chip response: OK{CR}{LF}

22. Firmware version of device information

Get instruction: AT+FIRMREV?{CR}{LF}

Description: Get the firmware version of the device information, in string format.

Return: Firmware version of device information.

Example: Host transmit: AT+FIRMREV?{CR}{LF} Chip response: VER1.0{CR}{LF}OK{CR}{LF}

Set instruction: AT+FIRMREV=< Firmware version >{CR}{LF}

Description: The firmware version is in the form of a string with a character size of no more than 18 characters. The parameters are saved during setting and will take effect the next time it is started.

Returns: Status.

Example: Host transmit: AT+FIRMREV=VER1.2{CR}{LF} Chip response: OK{CR}{LF}

23. Hardware version of device information

Get instruction: AT+HARDREV?{CR}{LF}

Description: Get the hardware version of device information in string format.

Return: Hardware version of device information.

Example: Host transmit: AT+HARDREV?{CR}{LF} Chip response: VER1.0{CR}{LF}OK{CR}{LF}

Set instruction: AT+HARDREV=< Hardware version >{CR}{LF}

Description: Set the hardware version information of the device, string format, no more than 18 characters.

Returns: Status.

Example: Host transmit: AT+HARDREV=VER1.2{CR}{LF} Chip response: OK{CR}{LF}

24. Software version of device information

Get instruction: AT+SOFTREV?{CR}{LF}

Description: Get the software version of device information in string format.

Return: Software version of device information.

Example: Host transmit: AT+SOFTREV?{CR}{LF} Chip response: VER1.0{CR}{LF}OK{CR}{LF}

Set instruction: AT+ SOFTREV =< Software version >{CR}{LF}

Description: Set the hardware version information of the device, string format, no more than 18 characters.

Returns: Status.

Example: Host transmit: AT+SOFTREV=VER1.2{CR}{LF} Chip response: OK{CR}{LF}

25. Manufacturer name of device information

Get instruction: AT+MANUNAME?{CR}{LF}

Description: Get the manufacturer name of the device information in string form.

Return: Manufacturer name of device information

Example: Host transmit: AT+MANUNAME?{CR}{LF} Chip response: WCH{CR}{LF}OK{CR}{LF}

Set instruction: AT+MANUNAME=< Manufacturer name >{CR}{LF}

Description: Set the manufacturer name of the device information, string format, no more than 18 characters.

Returns: Status.

Example: Host transmit: AT+MANUNAME=TEST{CR}{LF} Chip response: OK{CR}{LF}

26. PNP ID of device information

Get instruction: AT+PNPID?{CR}{LF}

Description: Query the PNPID of the device and return a 7-byte string converted into ASC format.

Return: PNP ID of device information

Example: Host transmit: AT+PNPID?{CR}{LF} Chip response: 01020304050607{CR}{LF}OK{CR}{LF}

Set instruction: AT+PNPID=<PNP ID>{CR}{LF}

Description: PNP ID is 7 bytes, i.e., the setting character is 14, PNP ID refers to the Bluetooth protocol.

Returns: Status.

Example: Host transmit: AT+PNPID=10203040506070{CR}{LF} Chip response: OK{CR}{LF}

27. Read RSSI

Instruction: AT+RSSI=<Control>, <Parameter>{CR}{LF}

Description: Reading RSSI is only valid after connection, and the command may be executed. RSSI will not be read when Bluetooth is not connected, and RSSI data will not be returned. This command can only be set but not queried. The control is "ON" and "OFF" respectively indicating on and off. Closing does not require parameters. The parameter is the cycle of reading RSSI in milliseconds. When the parameter is 0, it means a single reading, and the time interval of a single reading is 50mS. After the chip responds, it will return the read value of RSSI according to the set cycle time length. The returned value will always be returned in AT mode. It is recommended that reading and closing are performed in AT state to prevent conflicts with the data part. It is recommended that the time interval should not be less than 50mS. First, to ensure that the serial port can output normally, and secondly, there are intervals for Bluetooth processing transactions.

Return: Returns the status of the executed command.

Example: Host transmit: AT+RSSI=ON,1000{CR}{LF} Chip response: OK{CR}{LF}

Example: Host transmit: AT+RSSI=OFF{CR}{LF} Chip response: OK{CR}{LF

28. Read ADC

Instruction: AT+ADC?{CR}{LF}

Description: Read the sampling value of the ADC. The value will be returned in the form of ASCII characters. The valid range of the return value is 0-4095, which is the range of the 12-bit ADC sampling value.

Return: ADC sample value

Example: Host transmit: AT+ADC?{CR}{LF} Chip response: 2048{CR}{LF}OK{CR}{LF}

29. Set chip sleep mode

Query instruction: AT+SLEEP?{CR}{LF}

Description: Query the current sleep mode.

Return: Current sleep mode.

Example: Host transmit: AT+SLEEP?{CR}{LF} Chip response: 1{CR}{LF}OK{CR}{LF}

Set instruction: AT+SLEEP=<x>{CR}{LF}

Description: Set the chip to enter sleep mode during low power consumption. Parameters supported by It takes effect on reboot.

Example: Host transmit: AT+SLEEP=1{CR}{LF} Chip response: OK{CR}{LF}

30. Read the power supply voltage of the chip

Instruction: AT+ADC?{CR}{LF}

Description: Read the current power supply voltage of the chip, which is the VCC voltage value.

Return: A value in mV units.

Example: Host transmit: AT+BAT?{CR}{LF} Chip response: 2985{CR}{LF}OK{CR}{LF}

31. Host scan shows slave voltage

Query instruction: AT+BDSP?{CR}{LF}

Description: Query the current host scan display slave voltage setting status.

Return: Current setup status.

Example: Host transmit: AT+BDSP?{CR}{LF} Chip response: ON{CR}{LF}OK{CR}{LF}

Set instruction: AT+BDSP=<Control>{CR}{LF}

Description: The value of <Control> is "ON" or "OFF", corresponding to turning on and off the voltage echo. This parameter will affect the host to display slave information during scanning. For details, please refer to the scanning introduction in the host mode description below.

Example: Host transmit: AT+BDSP=ON{CR}{LF} Chip response: OK{CR}{LF}

32. Bluetooth configuration interface control

Query instruction: AT+BDSP?{CR}{LF}

Description: Query the current Bluetooth configuration interface switch status. This state means that the Bluetooth interface can obtain and configure parameters for the chip and is an enabled state. When the status is closed, the Bluetooth interface cannot obtain and configure parameters until it is reopened using the AT command.

Return: 0{CR}{LF}OK{CR}{LF} or 1{CR}{LF}OK{CR}{LF} corresponds to turn off the Bluetooth configuration interface and turn on the Bluetooth control interface respectively.

Example: Host transmit: AT+BLECFGEN?{CR}{LF} Chip response: 1{CR}{LF}OK{CR}{LF}

Set instruction: AT+BLECFGEN=<Parameter>{CR}{LF}

Description: <Parameter> is the same as the above query, which is 0 or 1, corresponding to close and open respectively.

Example: Host transmit: AT+BLECFGEN=1{CR}{LF} Chip response: OK{CR}{LF}

33. Broadcast channel settings

Query instruction: AT+BCCH?{CR}{LF}

Description: Query the current broadcast channel parameters. The return value is: 0, 1, 2, and 3 correspond to all three channels being turned on, broadcasting only on channel 37, broadcasting only on channel 38, and broadcasting only on channel 39. 37, 38, and 39 here are channels defined in the Bluetooth protocol. The parameters will take effect after restarting.

Example: Host transmit: AT+BCCH?{CR}{LF} Chip response: 0{CR}{LF}OK{CR}{LF}

Set instruction: AT+BCCH=<Parameter>{CR}{LF}

Description: Set the broadcast channel parameters, which affect the broadcast channel settings in broadcast mode and slave mode.

Example: Host transmit: AT+BCCH=0{CR}{LF} Chip response: OK{CR}{LF}

34. Broadcast interval setting

Query instruction: AT+ADVINTER?{CR}{LF}

Description: Query the current broadcast interval and return a numerical value. The unit is 0.625mS. The default is 160, which is a broadcast interval of 100mS.

Example: Host transmit: AT+ADVINTER?{CR}{LF} Chip response: 160{CR}{LF}OK{CR}{LF}

Set instruction: AT+ADVINTER=<Parameter>{CR}{LF}

Description: Set the broadcast time interval, <parameter> is a numerical value.

Example: Host transmit: AT+ADVINTER=1600{CR}{LF} Chip response: OK{CR}{LF}

35. Connection interval setting AT+CONNINTER

Query instruction: AT+CONNINTER?{CR}{LF}

Description: Query the connection interval parameters of the current chip and return an interval value, corresponding to the minimum and maximum values respectively. The Bluetooth protocol will negotiate a communication time during connection. If the parameters are not satisfied, the chip will initiate a renegotiation. The numerical unit is 1.25mS.

Example: Host transmit: AT+CONNINTER?{CR}{LF} Chip response: 6-16{CR}{LF}OK{CR}{LF}

Set instruction: AT+CONNINTER=< Parameter 1>-< Parameter 2>{CR}{LF}

Description: Set the connection interval parameters. The parameter range needs to meet the requirements of the Bluetooth protocol, and the set value should not exceed 65535.

Example: Host transmit: AT+CONNINTER=6-160{CR}{LF} Chip response: OK{CR}{LF}

36. Internal 32K clock calibration settings AT+LSICALI

Query instruction: AT+LSICALI?{CR}{LF}

Description: The chip returns the current internal 32K clock calibration parameters. There are three parameter fields, separated by commas. The parameter format is defined: <Calibration mode>, <Temperature difference threshold>, <Timing time>{CR}{LF}. The calibration mode value definition: 0: Turn off calibration, 1: Calibrate using timing method, 2: Use temperature difference calibration; Temperature difference threshold: The set value is the temperature difference change. After this value is set, it will be calibrated using temperature difference method. Use; timing time: in mS as the unit, set the timing time of the two calibration methods.

Example: Host transmit: AT+LSICALI?{CR}{LF} Chip response: 2,7,5000{CR}{LF}OK{CR}{LF}

Set instruction: AT+LSICALI=< Calibration mode>, < Temperature difference threshold>, < Timing time >{CR}{LF}

Description: Set the calibration mode of the current LSI clock. For parameter definition, refer to the query command.

Example: Host transmit: AT+LSICALI=2,10,10000{CR}{LF} Chip response: OK{CR}{LF}

37. RF calibration settings AT+RFCALI

Query instruction: AT+RFCALI?{CR}{LF}

Description: The chip returns the current RF calibration parameters. There are three parameter fields, separated by commas. The parameter format is defined: <calibration mode>, <temperature difference threshold>, <timing time>{CR}{LF}. The calibration mode value definition: 0: turn off calibration, 1: use timing mode calibration, 2: using temperature difference calibration; temperature difference threshold: the set value is the temperature difference change difference, which will be used when using temperature difference calibration after setting; timing time: set the timing time of the two calibration methods in the unit of mS. The format of the two calibration commands is the same.

Example: Host transmit: AT+RFCALI?{CR}{LF} Chip response: 2,7,5000{CR}{LF}OK{CR}{LF}

Set instruction: AT+RFCALI=< Calibration mode>, < Temperature difference threshold>, < Timing time >{CR}{LF}

Description: Set the current RF calibration mode. For parameter definition, refer to the query command.

Example: Host transmit: AT+RFCALI=2,10,10000{CR}{LF} Chip response: OK{CR}{LF}

38. TNOW Pin function settings AT+TNOW

Query instruction: AT+TNOW?{CR}{LF}

Description: The chip returns the current TNOW pin parameters. There are two parameter fields, separated by commas. The parameter format is defined: <TNOW enable>, <polarity selection> {CR} {LF}. The enable parameter value definition is: 0: Turn off the TNOW pin function, 1: Turn on the TNOW pin output. Polarity selection parameter value definition: 0: output according to the default method, 1: inverse output according to the default method. The setting parameters are in the same format as the query parameters.

Example: Host transmit: AT+TNOW?{CR}{LF} Chip response: 1,0{CR}{LF}OK{CR}{LF}

Set instruction: AT+TNOW=<TNOW enable>,< Polarity selection>{CR}{LF}

Description: Set the TNOW pin function, and refer to the query command for parameter definition.

Example: Host transmit: AT+TNOW=1,0{CR}{LF} Chip response: OK{CR}{LF}

39. BLESTA Pin function settings AT+BSTA

Query instruction: AT+BSTA?{CR}{LF}

Description: The chip returns the current BESTA pin parameters. There are two parameter fields, separated by commas. The parameter format is defined: <BESTA pin enable>, <Polarity selection> {CR} {LF}. The enable parameter value definition is: 0: Turn off the BESTA pin function, 1: Turn on the BESTA pin output. Polarity

selection parameter value definition: 0: output according to the default method, 1: inverse output according to the default method. The setting parameters are in the same format as the query parameters.

Example: Host transmit: AT+BSTA?{CR}{LF} Chip response: 1,0{CR}{LF}OK{CR}{LF}

Set instruction: AT+BSTA=<BLESTA enable>, < Polarity selection>{CR}{LF}

Description: Set the BSTA pin function, and refer to the query command for parameter definition.

Example: Host transmit: AT+BSTA=1,0{CR}{LF} Chip response: OK{CR}{LF}

40. Flow control function settings AT+AFEC

Query instruction: AT+AFEC?{CR}{LF}

Description: The chip returns the current flow control settings and DTR and RTS pin output status. There are three parameter fields, separated by commas. The parameter format is defined: <flow control on status>, <DTR pin output level>, <RTS pin Output level>{CR}{LF}. The value definition of the flow control enable parameter is: 0: Disable serial port flow control, 1: Enable serial port flow control. DTR pin output level parameter value definition: 0: The pin outputs high level, 1: The pin outputs low level. RTS pin output level parameter value definition: 0: The pin outputs high level, 1: The pin outputs low level. The setting parameters are in the same format as the query parameters. The flow control setting only affects RTS, and the CTS function is not affected. The chip will not be saved after setting, and the flow control state is enabled by default after power failure. When DTR and RTS settings are multiplexed into other pin functions, the settings will not affect their levels, and the current output status can still be obtained by obtaining parameters.

Example: Host transmit: AT+AFEC?{CR}{LF} Chip response: 1,1,1{CR}{LF}OK{CR}{LF}

Set instruction: AT+AFEC=<flow control on state>,<DTR pin output level>,<RTS pin output level>{CR}{LF}

Description: Set the flow control and related pin functions. For parameter definition, refer to the query command.

Example: Host transmit: AT+AFEC=1,1,1{CR}{LF} Chip response: OK{CR}{LF}

41. Set GPIO function enable AT+IOEN

Query instruction: AT+IOEN?{CR}{LF}

Description: The command acquires the GPIO enable byte in the configuration, each bit of the value in HEX format represents the corresponding GPIO on or off state, and the value acquired is a HEX-converted ASCII, such as: 0xFF, which represents the binary 11111111, and bit7-bit0 corresponds to GPIO7-GPIO0, where GPIO3-GPIO0 is synchronous transmission which is not affected by the parameter, and the value is 0 for the GPIO function to be turned off, and is 1 for the GPIO function to be turned on.

Return: Execution status.

Example: Host transmit: AT+IOEN?{CR}{LF} Chip response: FF{CR}{LF}OK{CR}{LF}

Set instruction: AT+IOEN=<8 IO enable>{CR}{LF}

Description: The set parameter format is consistent with the obtained parameter format. Each bit represents the corresponding IO enable status. The host will save the parameters after the setting is completed.

Return: Execution status.

Example: Host transmit: AT+IOEN=0F{CR}{LF}, disable GPIO7-GPIO4 function Chip response: OK{CR}{LF}

6. Operating Instructions

6.1 Slave mode

Step1. Set basic parameters, baud rate, working mode, etc., restart the chip, and the serial port will work according to the set parameters. You can set the relevant setting information parameters of the device mode.

Step2. You can enter AT mode to query the connection status, or you can directly perform transparent transmission. When not connected, the transparently transmitted data will be directly discarded.

Step3. Use software or host connection chip to transparently transmit data.AT configuration during transparent transmission will cause the data received by Bluetooth to be discarded directly.

7. Bluetooth Interface Configuration

7.1 Bluetooth Interface Configuration Description

CH592F works in Bluetooth slave mode and can configure the chip through Bluetooth. The configuration channel is a custom transmission channel, and the UUID is 0XFFF3. The transmission format strictly follows frame transmission. During transmission, one frame is split into several packets of Bluetooth transmission data. The Bluetooth read response also needs to read one frame of data before it can be completed. The configuration function supports notification service. When the Bluetooth host turns on the notification service, the chip will report the serial port sending status and MODEM signal status.

7.2 Format Description

The transmission data frame format is as shown in the table:

Field definition	Command code	Data length	Status parameter code	Data segment	Check
Field length	1	2	1	N	1

Command code: 1 byte, indicating the operation of the frame. The command code range sent by the host is 0x00-0x7F. The slave response command code: the highest position of the host command code is 1 (Host command code | 0x80);

Data length: 2 Bytes, the size is N+2, that is, the total length of the status parameter code, data segment, and check;

Status parameter code: 1 byte, which serves as an information segment for status or parameters when transmitting different command codes;

Data segment: N bytes, the length is the size of the transmitted data, and the numerical settings in the data are uniformly in little-endian format;

Check: 1 byte, the value is the cumulative sum of the status parameter code and the data segment.

After the host sends a configuration frame, it must obtain the response frame from the slave, except for frames without response such as reset frames.

7.3 Configuration Parameter

7.3.1 Parameter Description

The configuration parameters include two: Bluetooth configuration information and slave mode device information. Bluetooth configuration information mainly configures Bluetooth working mode, serial port parameters, version information, etc. Device information in slave mode is mainly configured. Device information attributes in slave mode include: System ID, Model Number String, Serial Number String, Firmware Revision String, Hardware Revision String, Software Revision String, Manufacturer Name String, PnP ID.

7.3.2 Bluetooth Configuration Information

Offset	Size	Name	Function	Remark
0	1	Parameter flag	Identify parameter validity	Do not modify this value
1	20	Device name	The device name recognized by the host	In the broadcast packet response packet
21	6	Device MAC address	MAC address of the current chip	It is recommended not to modify
27	6	Connect MAC address	Record the other party's MAC after connection	Read only
33	2	Version number	Current chip version	Read only

35	30	Startup message		Reserved parameters
65	4	Serial port baud rate	Baud rate of communication serial port	
69	1	Serial port data bit	Data bit of communication serial port	
70	1	Serial port check bit	Check bit of communication serial port	
71	1	Serial port stop bit	Stop bit of communication serial port	
72	2	Serial port packaging timeout	Communication serial port timeout time	
74	4	Low-power sleep time	Configure custom sleep time	Reserved parameters
78	1	Low-power mode	Set low-power mode	
79	1	Chip working mode	Set chip Bluetooth working mode	
80	1	Chip transmit power	Set Bluetooth transmit power	
81	1	Broadcast mode	Reserved parameters	Broadcast mode parameter
82	1	Broadcast mode	Reserved parameters	Broadcast mode parameter
83	2	Broadcast time	Reserved parameters	Broadcast mode parameter
85	2	Minimum connection interval	Set default minimum connection parameters	Slave mode parameter
87	2	Maximum connection interval	Set default maximum connection parameters	Slave mode parameter
89	2	Timeout time	Set Bluetooth connection timeout parameters	Slave mode parameter
91	20	Device name	Displayed in DeviceName of Generic Access	Slave mode parameter
111	1	Password enable		Slave mode parameter
112	1	Password length		Slave mode parameter
113	6	Password		Slave mode parameter
119	4	Default connected MAC flag	Default saving of 4 sets of default connection parameters	Host mode parameter
123	24	Default connected MAC	4*6: 4 groups of default connection MAC parameters	Host mode parameter
147	24	Password for the default connected MAC	4*6:4 sets of password parameters for the default connection to the MAC	Host mode parameter
171	1	GPIO mode settings	Set GPIO input and output 1: Output 0: Input	Each bit corresponds to one IO bit7-0 corresponds to GPIO7-0.

172	1	GPIO level value setting	Set GPIO output level 1: output high 0 output low	Each bit corresponds to one IO bit7-0 corresponds to GPIO7-0.

7.3.3 Slave Device Information

Offset position	Size	Name	Function	Remark
0	1	Parameter flag	Identify parameter validity	Do not modify this value
1	8	System ID	System ID	
9	20	Model Number String	Device No	String format
29	20	Serial Number String	Serial Number	String format
49	20	Firmware Revision String	Firmware version number	String format
69	20	Hardware Revision String	Hardware version number	String format
89	20	Software Revision String	Software version number	String format
109	20	Manufacturer Name String	Manufacturer name	String format
129	7	PnP ID	PnP ID	

7.3.4 Bluetooth Control Parameters

This parameter is supported after version v1.04. The parameter contains a "block" size of 512 bytes. Please refer to the table below for the currently used range of the parameter. Other unused parts are reserved for future use.

Offset position	Size	Name	Function	Remark
0	1	IMAGE information	Current image information	Do not modify this value
1	3	Reserved parameters		Do not modify this value
4	1	Parameter flag	Identify parameter validity	Do not modify this value
5	2	Version number	Current chip version	Do not modify this value
7	1	Bluetooth configuration interface enable	Turn on and off the Bluetooth configuration interface	Set the parameters to 0x00 and 0x01, corresponding to closing and opening. After closing, Bluetooth will not be able to access the chip configuration.
8	1	Broadcast channel configuration	Configure broadcast channel parameters	The setting values are 0x07, 0x01, 0x02 and 0x04, which respectively correspond to three channel broadcasts, broadcasting only on

				channel 37, broadcasting only on channel 38 and broadcasting only on channel 39.
9	1	Control configuration, bit-defined switches	bit7: Parameter validity	Do not modify this value
			bit6: Display slave power supply voltage during scanning	0: Off 1: On
10	2	Preserve control configuration		Do not modify this value
12	1	Internal LSI calibration method	0: Turn off calibration 1: Use timing mode 2: Use temperature difference mode	v1.06 Version increase
13	1	Bluetooth RF calibration method	0: Turn off calibration 1: Use timing mode 2: Use temperature difference mode	
14	1	Temperature change threshold for internal LSI calibration	Temperature difference	
15	1	Temperature change threshold for Bluetooth RF calibration	Temperature difference	
16	4	Internal LSI calibration timing time	Timing time in mS unit	
20	4	Bluetooth RF calibration timing time	Timing time in mS unit	
21	1	GPIO function enable	Define GPIO enable by Bit	v1.07 Version increase
22	1	TNOW pin able	bit4: Polarity control bit0: Enable	
23	1	BLESTA pin able	bit4: Polarity control bit0: Enable	
24	1	Reserved parameters		
25-511		Reserved parameters		Do not modify this value

7.4 Configuration Command Description

7.4.1 Get Configuration

The host transmits a configuration frame. The frame format is as follows:

Command code	Data length	Status parameter code	Data segment	Check	Function
0x01	0x00 0x02	0x01	Empty	0x01	Get Bluetooth configuration

					information
0x01	0x00 0x02	0x02	Empty	0x02	Get device information in slave mode
0x01	0x00 0x02	0x03	Empty	0x02	Get Bluetooth control parameters

Chip response:

Command code	Data length	Status parameter code	Data segment	Check	Function
0x81	Configuration information length+2	0x01	Configuration information	check	Return Bluetooth configuration information
0x81	Device information length+2	0x02	Device information	check	Return device information in slave mode
0x81	Bluetooth control parameter length+2	0x03	Bluetooth control parameters	check	Return Bluetooth control parameters

7.4.2 Configuration Parameter

The host transmits a configuration parameter frame with the following frame format:

Command code	Data length	Status parameter code	Data segment	Check	Function
0x02	Configuration information length+2	0x01	Configuration information	check	Configure Bluetooth configuration parameters
0x02	Device information length+2	0x02	Device Information	check	Configure Bluetooth configuration parameters
0x02	Bluetooth control parameter length+2	0x03	Bluetooth control parameters	check	Configure Bluetooth control parameters

Chip response:

Command code	Data length	Status parameter code	Data segment	Check	Function
0x82	0x00 0x02	0x01	Empty	0x01	Configure parameter response
0x82	0x00 0x02	0x02	Empty	0x02	Configure device information response
0x82	0x00 0x02	0x03	Empty	0x03	Configure Bluetooth control parameter response

7.4.3 Reset Parameter

The host transmits a reset parameter frame with the following frame format:

Command	Data length	Status	Data	Check	Function

code		parameter code	segment		
0x03	0x00 0x02	0x01	Empty	0x01	Reset Bluetooth configuration information
0x03	0x00 0x02	0x02	Empty	0x02	Reset device information in slave mode
0x03	0x00 0x02	0x03	Empty	0x02	Reset Bluetooth control parameters

Chip response:

Command code	Data length	Status parameter code	Data segment	Check	Function
0x83	0x00 0x02	0x01	Empty	0x01	Reset parameter response
0x83	0x00 0x02	0x02	Empty	0x02	Reset device information response
0x83	0x00 0x02	0x03	Empty	0x03	Reset Bluetooth control parameters response

7.4.4 Reset Chip

The host transmits a reset parameter frame with the following frame format:

Command code	Data length	Status parameter code	Data segment	Check	Function
0x04	0x00 0x02	0x00	Empty	0x00	Reset Bluetooth configuration information

The chip will be reset directly when receiving a reset frame and will not respond to the frame.

7.4.5 GPIO-related Command

The host transmits a GPIO configuration parameter frame with the following frame format:

Command code	Data length	Status parameter code	Data segment	Check	Function
0x05	0x00 0x04	0x01	NUM+DIR	check	Setting the direction of the NUM number NUM number: 0x04 - 0x07 DIR: 0x00 input, 0x01 output
0x05	0x00 0x03	0x02	NUM	check	Read the level status of NUM GPIO
0x05	0x00 0x04	0x03	NUM+VAL	check	Setting the level value of NUM GPIO VAL: 0x00 low, 0x01 high
0x05	0x00 0x04	0x04	GPIO1+GPIO3	check	Synchronization parameters, generally used to connect two chips, other hosts do not need to operate
0x05	0x00 0x02	0x05	Empty	0x05	Read ADC value

Chip response:

Command code	Data length	Status parameter code	Data segment	Check	Function
0x85	0x00 0x03	0x01	STA	check	Return the status of setting GPIO, 0

					indicates success, others indicate failure.
0x85	0x00 0x04	0x02	NUM+VAL	check	Return the level status of the read GPIO
0x85	0x00 0x03	0x03	STA	check	Returns the status of the set level value. 0 indicates success, others indicate failure.
0x85	0x00 0x04	0x04	GPIO1+GPIO3	check	Synchronization parameters, generally used to connect two chips, other hosts do not need to operate
0x85	0x00 0x04	0x05	ADC_VAL	check	Returns the value read by the ADC, 2 bytes

7.4.6 Serial Port Parameter Settings

The host transmits a serial port configuration parameter frame. The frame format is as follows:

Command code	Data length	Status parameter code	Data segment	Check	Function
0x06	0x00 0x09	0x00	Serial port parameters	check	Configure serial port parameters

Serial port parameter format definition:

Offset position	Size	Name	Function	Remark
0	4	Baud rate		little endian format
4	1	Data bit	Serial port data length	Parameter value: 5-8
5	1	Stop bit	Stop bit formatting	Parameter value: 1-2
6	1	Check bit	Parity bit format selection	0: No parity 1: Odd parity 2: Even parity 3: Flag bit 4: Blank bit

Chip response:

Command code	Data length	Status parameter code	Data segment	Check	Function
0x86	0x00 0x09	0x00	Serial port parameters	check	The response parameter content is consistent with the settings

7.4.7 Flow Control Function Settings

The host transmits a flow control function setting frame. The frame format is as follows:

Command code	Data length	Status parameter code	Data segment	Check	Function

0x07	0x00 0x05	0x00	Flow control function parameters	check	Configure flow control function

Flow control function parameter format definition:

Offset position	Size	Name	Function	Remark
0	1	Flow control enable		0: Turn off the flow control function 1: Turn on the flow control function
1	1	DTR pin setting	DTR output level settings	0: DTR pin output is high 1: DTR pin output is low
2	1	RTS pin setting	RTS output level settings	0: RTS pin output is high 1: RTS pin output is low

Chip response:

Command code	Data length	Status parameter code	Data segment	Check	Function
0x87	0x00 0x05	0x00	Flow control function parameters	check	The response parameter content is consistent with the settings

7.4.8 Serial Port Status and MODEM Status Reporting

Chip response:

Command code	Data length	Status parameter code	Data segment	Check	Function
0x88	0x00 0x04	0x00	Serial port status parameters	check	Serial port and MODEM status reporting

Serial port status parameter format definition:

Offset position	Size	Name	Function	Remark
0	1	Serial port status	bit1: MODEM change bit0: Serial port sends empty	Corresponding bit value definition: Set to 1: The status is valid Set to 0: The status is invalid
1	1	MODEM status	bit7: Bit inverse of DCD pin, valid for 1 bit6: Bit inverse of RI pin, valid 1 bit5: Bit inverse of DSR pin, valid 1 bit4: Bit inverse of CTS pin, 1 is valid bit3: a 1 indicates a change at the DCD pin bit2: a 1 indicates a change on the RI pin	

			bit1: A value of 1 indicates a change on the DSR pin. bit0: A value of 1 indicates a change on the CTS pin.	

After the configuration channel notification attribute is turned on, CH592F detects the status change of the serial port and transmits the frame to the host via Bluetooth.

8. BLE-B-K3-ANT Module Recommended Pad Size

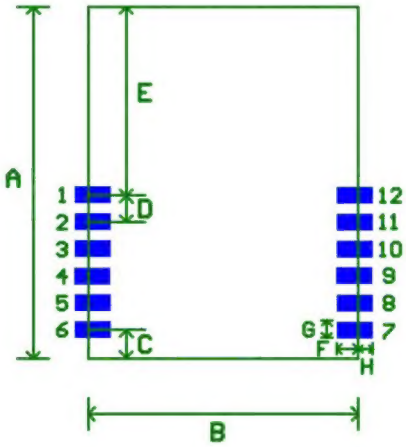

Name	Value	Unit
A	16.86	mm
B	12.84	
C	1.36	
D	1.27	
E	9.15	
F	1.05	
G	0.8	
H	0.65	

9. Layout Suggestion

The upper end of the module is an onboard antenna. The layout of the antenna is related to the quality of wireless communication. Good communication quality can ensure stable data transmission rate. The module can operate alone without additional ground layers, but when installing the module on other PCBs, please note: the antenna area must be away from other metal devices, and the distance must be greater than 20mm. Any conductor close to the antenna may seriously affect the antenna pattern (Radiation Pattern).

The following figure is a schematic diagram of the reference layout of the module. The first three situations are correct, as long as the stratum does not exceed the stratum edge of the module. The latter three cases are incorrect, the left example is when there is a ground plane under the antenna, the middle example is when there is not enough clearance around the antenna, and the last example is when the battery metal casing is not moved away from the antenna area.

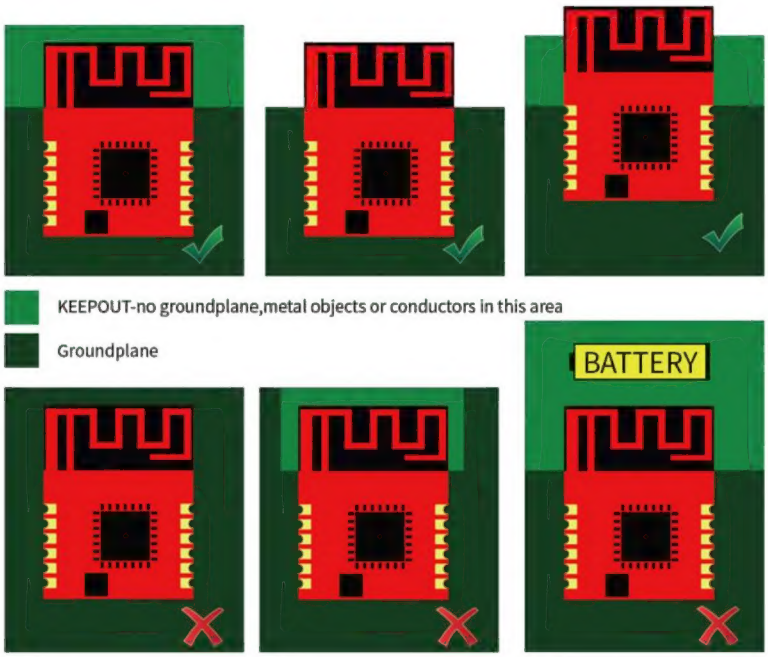

10. Reference Schematic

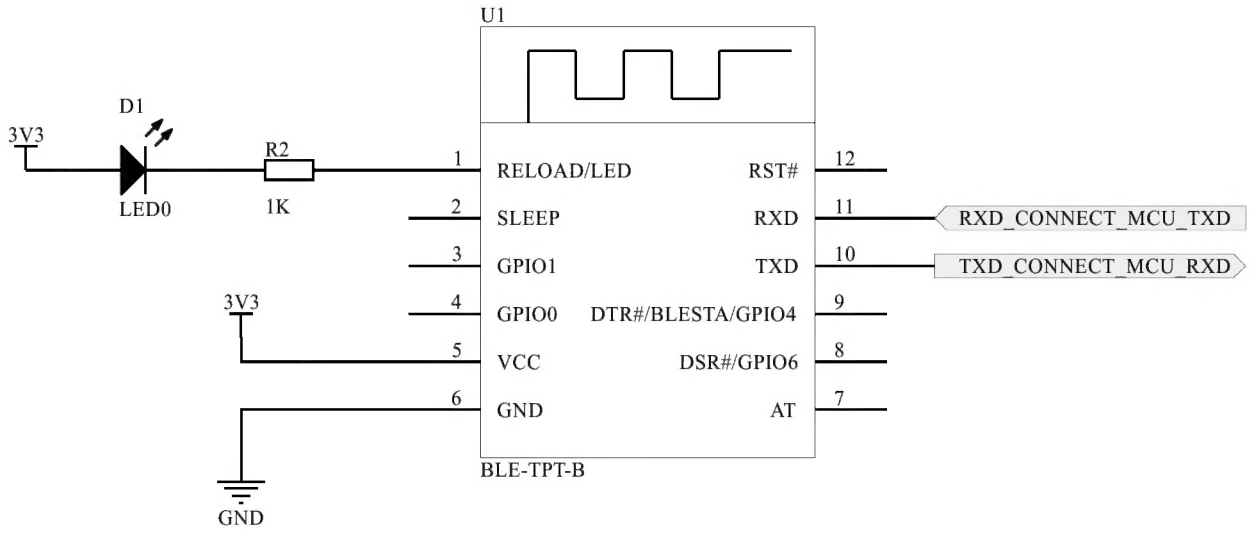

11. Parameters

11.1 Absolute Maximum Ratings

(Critical or exceeding the absolute maximum value may cause the chip to operate improperly or even be damaged.)

Name	Parameter description	Min.	Max.	Unit
TA	Operating ambient temperature	-40	85	℃
TS	Storage ambient temperature	-40	105	℃
VCC	System power voltage	-0.4	3.9	V
VIO	Voltage of input or output pin	-0.4	VCC+0.4	V

11.2 Electrical Parameters

Name	Parameter description	Min.	Typ.	Max.	Unit
VCC	Power voltage	2.5	3.3	3.6	V
VIL	Low level input voltage	0		0.9	V
VIH	High level input voltage	2.0		VCC	V
VOL	Low level output voltage	0	0.3	0.4	V
VOH	High level output voltage	VCC-0.4	VCC-0.3	VCC	V
IUP	Input current of input terminal with built-in pull-up resistor	25	60	90	uA